TABULATION BLOCK		
PART NO.	DRIVE SIZE	"T" THD. SIZE
023–001–A	.104 SQUARE	7/8–18
023–001–B	.150 SQUARE	7/8–18
023–001–C	.187 SQUARE	7/8–18
023–001–D	.152 ROUND	7/8–18
023–001–E	.187 ROUND	7/8–18
023–001–F	.203 ROUND	7/8–18
023–001–G	DIN	22MM X 1.5
023–001–H	.187 ROUND	22MM X 1.5

PART NO. 023–001–X

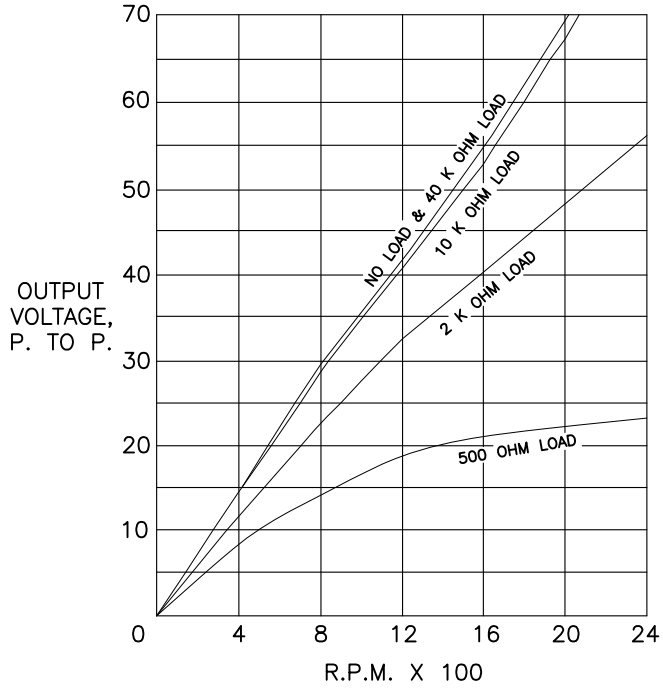

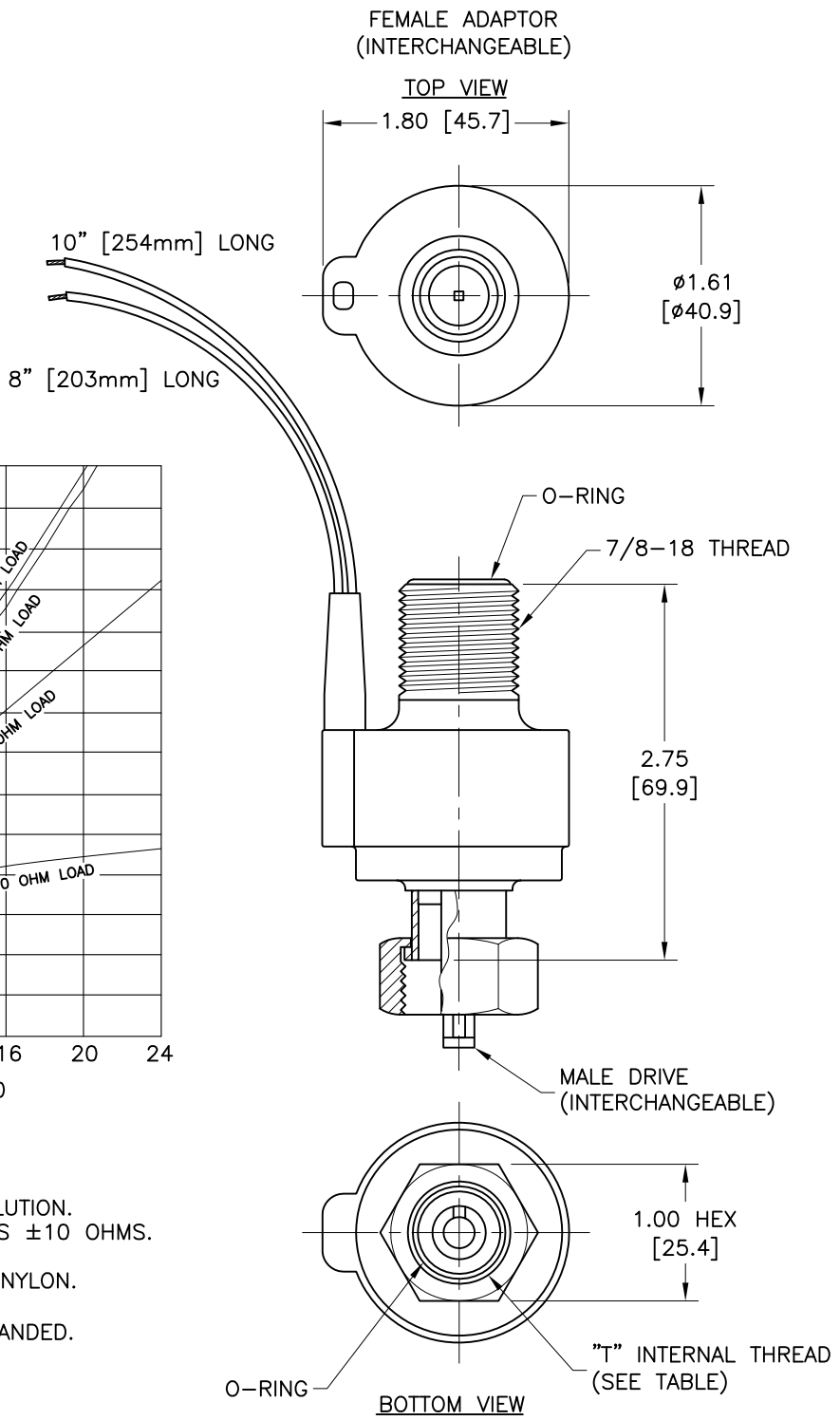

SPECIFICATIONS:

1. FREQUENCY: 8 PULSES PER REVOLUTION.
2. DC SOURCE IMPEDANCE: 285 OHMS ±10 OHMS.
3. INDUCTANCE: 107mH AT 1000Hz.
4. HOUSING MATERIAL: GLASS FILLED NYLON.
5. BEARING: DOUBLE–OILITE.
6. LEAD WIRES: 18 AWG., 16/19 STRANDED.

NOTES:

1. DUAL OUTPUT GENERATOR ALSO AVAILABLE.
2. SPECIAL LENGTHS AND CONNECTORS AVAILABLE.
3. AVAILABLE IN DIN, M22 X 1.5 METRIC THREAD.
4. NO POLAIRTY ON LEAD WIRES. ONE LEAD WIRE TO SIGNAL, THE OTHER LEAD WIRE TO GROUND.

REVISIONS

REV.	DESCRIPTION	EO#	DATE	BY
A	REVISED PER ECO	ECO 403	06/13/08	EGM
B	REVISED PER ECO	ECO 740	4/11/17	JAG

B

TOLERANCES

UNLESS OTHERWISE SPECIFIED:
DIMENSIONS ARE IN INCHES, METRIC EQUIVALENTS ARE IN [BRACKETS]:
.X = .030 [0.76]
.XX = .010 [0.25]
.XXX = .005 [0.13]
FRACTIONS = 1/32
ANGLES = ±1°

SCALE: 3/4

HEWITT INDUSTRIES OF LOS ANGELES

TITLE: SIGNAL GENERATOR

DRAWN BY: E.MARIANO
APPR. BY: H.L.FUJITA
DATE: 06/13/08
PART NO. 023–001–X
SHEET 1 OF 1