HEWITT INDUSTRIES
Engineering Excellence in Engine Controls

Phone: (714) 891-9300
Fax: (714) 897-7632
www.hewittindustries.com
E-mail: danny@hewittindustries.com

BACK PRESSURE MONITOR
Operator Display with Exhaust Temperature
KIT 194-722
Device Operation and Installation

Back Pressure Monitor Kit (P/N 194-722) is a microprocessor based controller that monitors exhaust system back pressure and indicates excessive pressure. Two lights indicate the presence of initial high back pressure level (*Yellow* - Service Engine) and extreme high back pressure level (*Red* - Stop Engine). Two additional lights indicate excessive exhaust temperature, a *Yellow* - Service Engine and a *Red* - stop Engine. The lights remain lit once the pressure levels are reached and will appear after the event indefinitely until reset by maintenance personnel.

The Remote Transducer Module employs (P/N 030-203) an internal pressure transducer to measure exhaust pressure. The exhaust pipe is tapped ahead of the particulate filter or catalytic converter. Exhaust passes through a stainless steel hose and then through Tygon tubing to reach the module unit (P/N 030-203). Exhaust temperature is sensed using a thermocouple.

The Remote Transducer module (P/N 030-203) is connected to the P/N 030-205 Dashboard Display module. The display contains the four (4) alarm LED's.

The initial high back pressure level light (*Yellow*) is typically triggered at a pressure of 3.6 PSI (determined by application, factory and field adjustable for REV 1.4 and up). This light indicates that servicing of the vehicle is required. The pressure level is filtered for fifteen (15) seconds to ignore "spikes" in pressure that occur in normal engine use. The initial high exhaust temperature (*Yellow*) is triggered at 1200ºF. This setting is also filed adjustable. When the pressure and temperature falls below the low limit, the *Yellow* light will continue to be lit.

The extreme high back pressure level light (*Red*) is triggered at a pressure of 5.1 PSI (determined by application, factory and field adjustable for Rev 1.4 and up). This light indicates a potentially damaging pressure level has been reached. The pressure level is filtered for fifteen (15) seconds to ignore "spikes" in pressure that occur in normal engine use. The extreme high exhaust temperature (Red) is triggered at 1400ºF.

Upon detection of high temperature or high pressure level for fifteen (15) seconds, the Display (P/N 030-205) will begin to flash the *Red* extreme pressure light and will continue to flash as long as pressure remains continuously above the high pressure limit. When the pressure falls below the high limit, the *Red* light will cease to flash but will remain lit.

Resetting the lights for maintenance is accomplished by pressing the reset switch for a minimum of one (1) second. The lights will be extinguished at that time and the unit is ready for normal operation. If the reset switch were held on for five (5) seconds, then the module would enter the self-test mode and flash the lights on the module.

A self-test feature is exercised when the ignition is turned on, causing the two lights to flash for approximately three (3) seconds to indicate proper operation of the module. After the self-test concludes the module may leave either or both lights illuminated to indicate a past over-pressure event. The lights can only be reset by maintenance personnel while the ignition is on. If ignition is turned off, the module retains memory of the over-pressure event(s) as long as the vehicle battery is connected.

HEWITT INDUSTRIES
Engineering Excellence in Engine Controls

Phone: (714) 891-9300
Fax: (714) 897-7632
www.hewittindustries.com
E-mail: danny@hewittindustries.com

BACK PRESSURE MONITOR
Operator Display with Exhaust Temperature
KIT 194-722

The Remote Sender also provides two (2) open-collector (grounding) outputs suitable to drive external automotive relays (12 volt P/N 405-006, 24 volt P/N 405-006-1) or as inputs to the vehicle ECU. One output will engage and latch on when the high pressure limit is exceeded for thirty (30) seconds continuously. The second output engages and latches on similarly for the high temperature limit . The relay output functions are independent of the display functions.

The Remote Transducer module (P/N 030-203) communicates with the Dashboard Display or Dashboard Throttle Control through the *Link / Reset* wire that connects the two (2) units together. The communication is constant unless the wire is interrupted or grounded. Grounding the *Link / Reset* wire is accomplished by the reset switch to clear the alarm lights. If the display module detects an open or shorted *Link / Reset* wire, then the self-test mode is initiated, causing the alarm lights to flash. Detection of an open wire occurs in approximately one (1) second. Detection of a short occurs in approximately five (5) seconds.

Operation Summary

1. Ignition on self-test feature causes both *Red* and *Yellow* lights to flash for three (3) seconds.

2. As long as over-pressure conditions are not sensed, the lights go off to indicate normal engine operation.

3. When the lower pressure level is reached due to initial excess back pressure, the *Yellow* light will be illuminated to signal engine service is required.

4. When the upper pressure level is reached due to extreme excess back pressure, the *Red* light will begin to flash and if Throttle Control is employed, the throttle level will begin to derate slowly (approximately 1% - 3% per second).

5. As long as extreme pressure condition remains, the *Red* light will continue to flash.

6. The *Yellow* light will always be lit whenever the *Red* light is flashing or lit because both over-pressure limits will have been reached.

7. Over-pressure “spikes” during normal engine operation (i.e. initial burst in RPM upon acceleration) are ignored for fifteen (15) seconds.

8. The *Red* and *Yellow* lights remain lit after the over-pressure condition is reached and as long as ignition is on until reset by maintenance personnel.

9. When ignition is turned off, the lights will go off.

10. When ignition is turned on again, the lights will flash for self-test and then will display the previous over-pressure condition if it occurred.

KIT NO.	194–719	
QTY	PART NUMBER	DESCRIPTION
1	030–201	REMOTE BP/TEMP. MONITOR
1	030–200–05	DASH B.P. MONITOR DISPLAY
1	063–104	BACK PRESS. PORT ADAPTER
1	064–008–1	FITTING ASSEMBLY
2	071–440	MODULE WIRING HARNESS
1	071–326	RESET SWITCH WIRING HARNESS
2	071–131	RESET EXTENSION HARNESS
1	721–110–04	4mm NYLON TUBING
1	721–300–030	HIGH TEMP. LINE STAIN. STEEL

NOTE: HARNESS AND TUBE LENGTHS TO BE DETERMINED BY CUSTOMER.

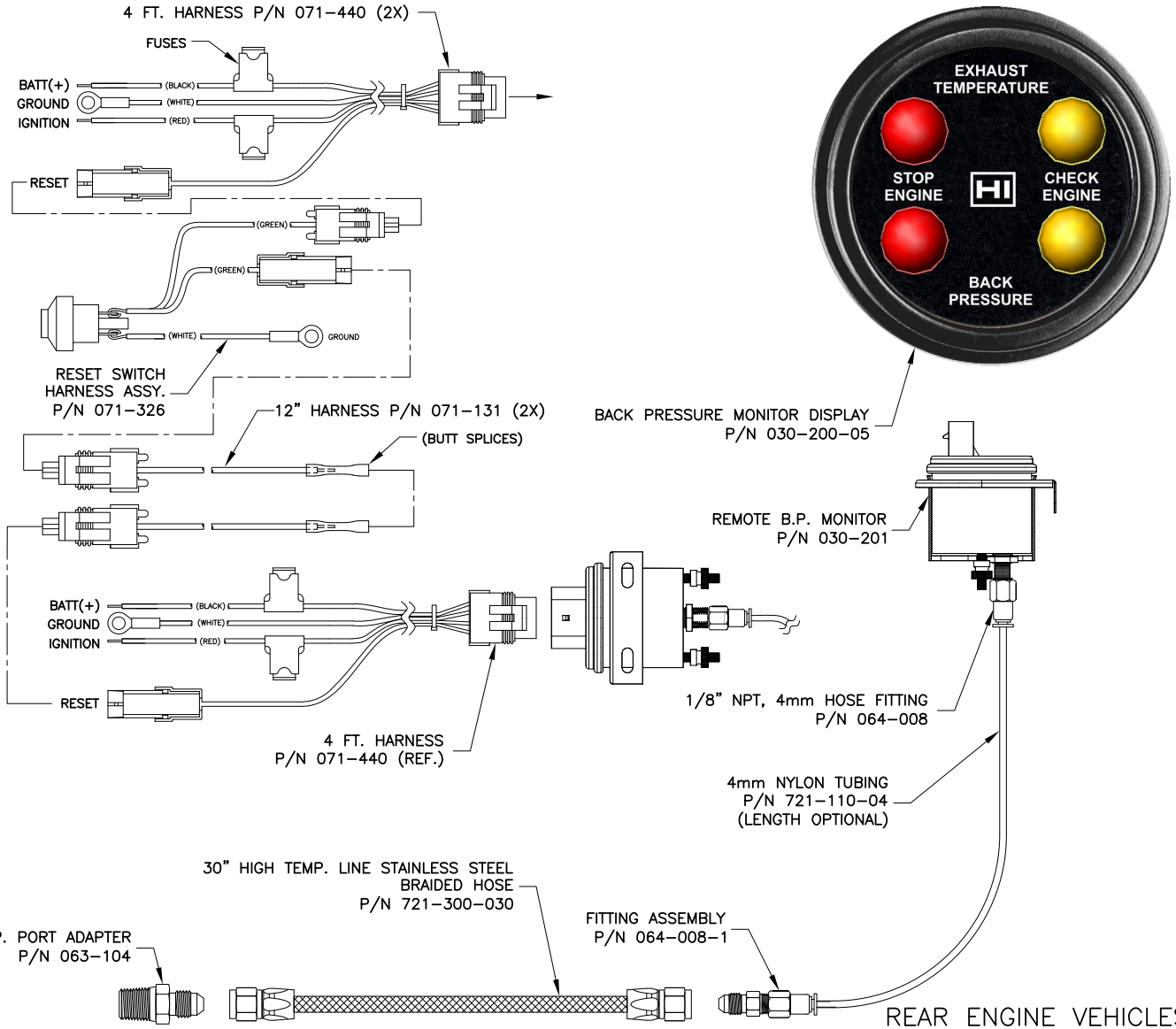

REAR ENGINE VEHICLES, NO THROTTLE CONTROL

FEATURES:

1. MONITORS EXHAUST BACK PRESSURE.
2. LOW LIMIT SENSOR LIGHTS "CHECK ENGINE" – 3.6 PSI TYPICAL.
3. HIGH LIMIT SENSOR LIGHTS "STOP ENGINE" AND LATCHES LIGHT ON 5.1 PSI, TYPICAL.
4. FACTORY SET LOW AND HIGH PRESSURE LEVELS MAY BE CUSTOMER DEFINED.
5. TO CLEAR LIGHTS, GROUND "RESET" WIRE FOR 0.5 SECONDS MINIMUM.

REVISIONS				
REV.	DESCRIPTION	EO#	DATE	BY

D

TOLERANCES

UNLESS OTHERWISE SPECIFIED:

DIMENSIONS ARE IN INCHES, METRIC EQUIVALENTS ARE IN [BRACKETS]:

.X = .030 [0.76]
.XX = .010 [0.25]
.XXX = .005 [0.13]
FRACTIONS = 1/32
ANGLES = ±1°

SCALE: NONE

HEWITT INDUSTRIES OF LOS ANGELES

TITLE: BACK PRESSURE MONITORING SYSTEM

DRAWN BY: E.M.
APPR. BY: J.H.
DATE: 10/23/07

KIT NO. 194–719

SHEET 1 OF 2

KIT NO. 194–719

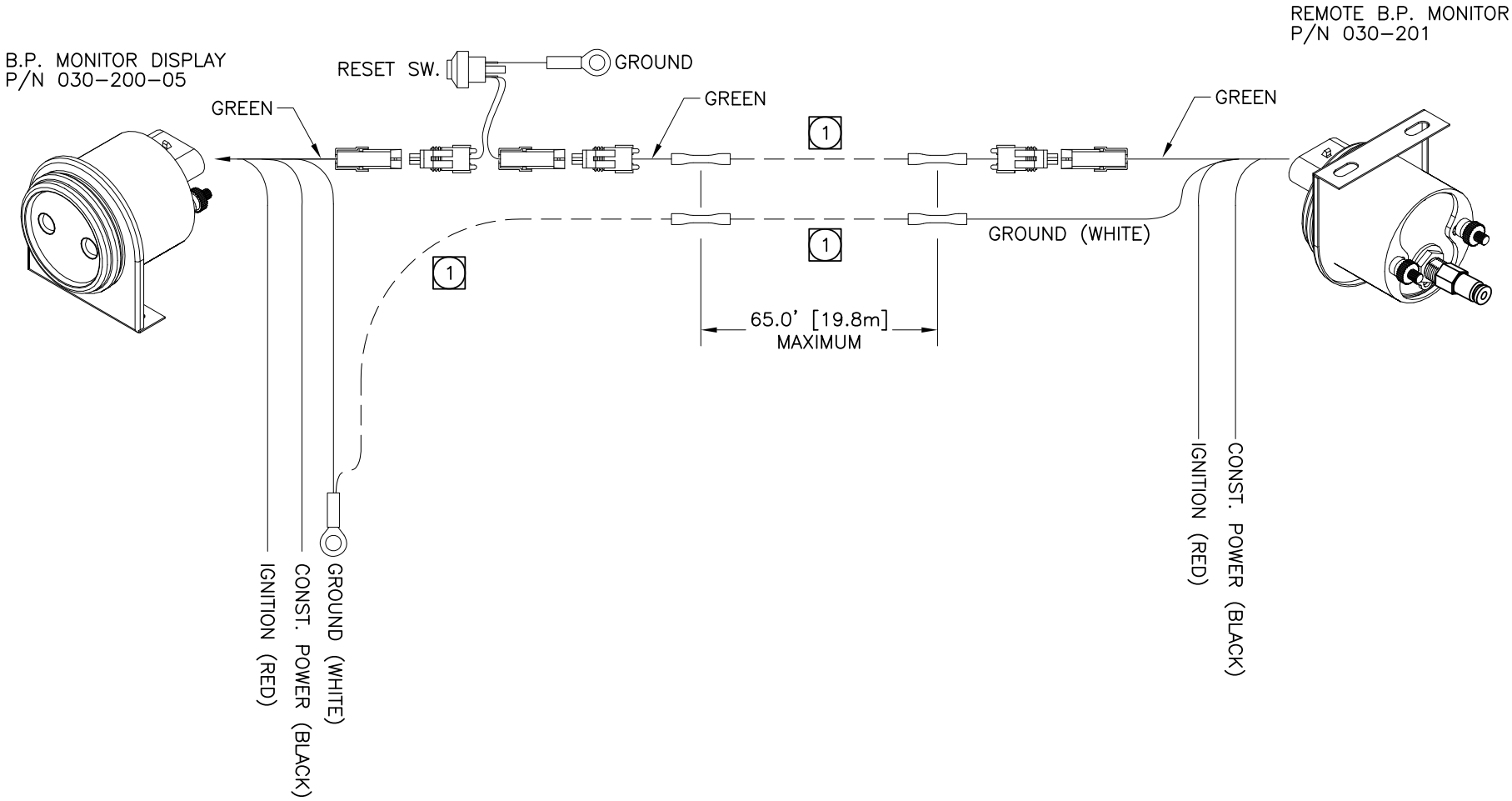

NOTES:

1. WIRING, WHEN NECESSARY FOR EXTRA LENGTH, TO BE SUPPLIED BY CUSTOMER. 18 GAUGE / 16 STRANDED UL1015 TINNED COPPER WIRE WITH 0.095"±0.005" [2.41mm±0.13mm] DIAMETER OUTER INSULATION, 221°F [105°C] RATED.

D

REVISIONS				
REV.	DESCRIPTION	EO#	DATE	BY

TOLERANCES

UNLESS OTHERWISE SPECIFIED:

DIMENSIONS ARE IN INCHES, METRIC EQUIVALENTS ARE IN [BRACKETS]:

.X = .030 [0.76]
.XX = .010 [0.25]
.XXX = .005 [0.13]
FRACTIONS = 1/32
ANGLES = ±1°

SCALE: NONE

HEWITT INDUSTRIES OF LOS ANGELES

TITLE: BACK PRESSURE MONITORING SYSTEM

DRAWN BY: E.M.

APPR. BY: J.H.

DATE: 10/23/07

KIT NO. 194–719

SHEET 2 OF 2

Example: Low or High Over Pressure Condition

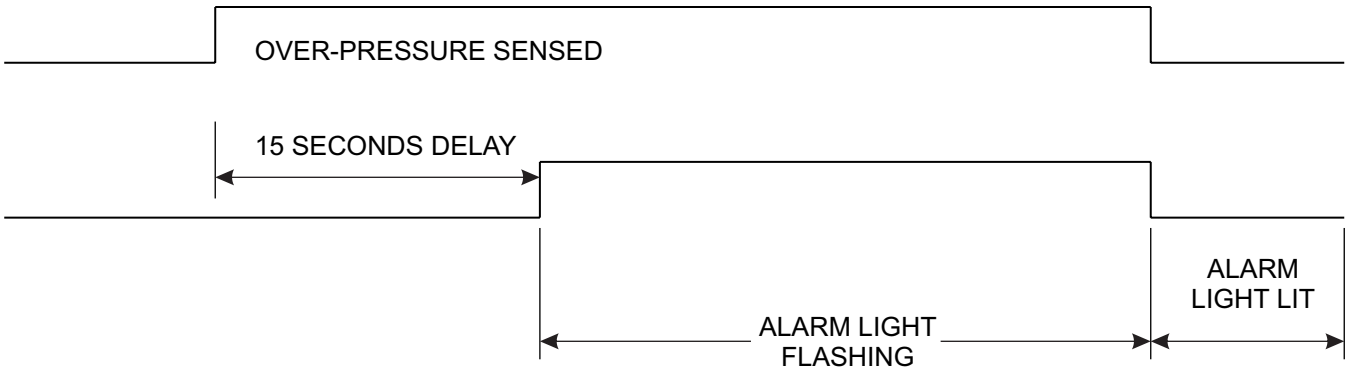

TROUBLESHOOTING CHART

SYMPTOM	POSSIBLE CAUSE	CORRECTIVE ACTION
After self-test, YELLOW light stays lit and are permanently cleared by RESET switch.	Normal operation, indicated that lower over-pressure limit was exceeded.	Service exhaust system.
After self-test, RED and YELLOW lights stay lit and are permanently cleared by RESET switch.	Normal operation, indicates that low and high over pressure limits were exceeded.	Service exhaust system.
Ignition off, RED or YELLOW light illuminated	Defective module.	Replace module.
Turn on ignition, RED and/ or YELLOW lights do not flash for 3 seconds.	Defective module.	Replace module.
Turn on ignition, after self-test (3 seconds), RED light stays on but YELLOW light is off.	Defective high-pressure switch.	Jumper the switch wires at the module or at switch. If RESET switch now clears light then switch or cabling is defective and needs replacement.
After self-test, RED or YELLOW lights stay on, but are not cleared by RESET switch when pressed.	Defective module.	Replace module.
After self-test, RED light stays on, is cleared by RESET switch, but then goes on again without engine running.	Open high-pressure switch.	Jumper the switch wires at the module or at switch. If RESET switch now clears light then switch or cabling is defective and needs replacement.
After self-test, YELLOW light stays on, is cleared by RESET switch, but then goes on again without engine running.	Open low-pressure switch.	Jumper the switch wires at the module or at switch. If RESET switch now clears light then switch or cabling is defective and needs replacement.
Ignition on, neither RED nor YELLOW lights lit, but engine RPM is extremely limited and not increased when throttle pedal is pressed.	Defective module.	Replace module.
Ignition on, neither RED nor YELLOW lights lit, engine RPM is limited, but increases when throttle pedal is pressed.	Defective throttle pedal cable or defective module.	Disconnect module from throttle pedal, bypass module by directly connecting throttle wire. If symptoms persist then module is not source of problem.
Ignition on, after self-test flashing for 3 seconds, both lights continue to flash indefinitely.	Reset / link wire is open.	Verify connection of LINK/RESET wire (green) between the modules. Verify power and ground at the Remote Transducer module. Verify ignition signal at Display module.
Ignition on, after self-test flashing is completed, and additional delay of five seconds with lights out, then both lights begin to flash for three seconds. Cycle repeats every five seconds.	Reset / link wire is shorted to ground.	Verify connection of LINK/RESET wire (green) between the modules. Disconnect from module and verify wire is not shorted to ground with ohm meter. Verify reset switch is not shorted